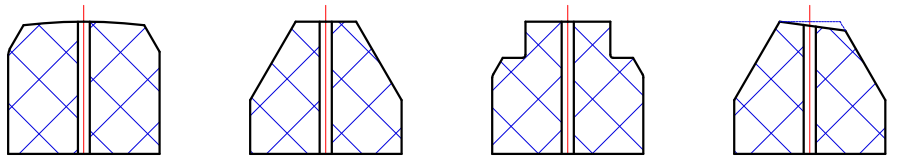

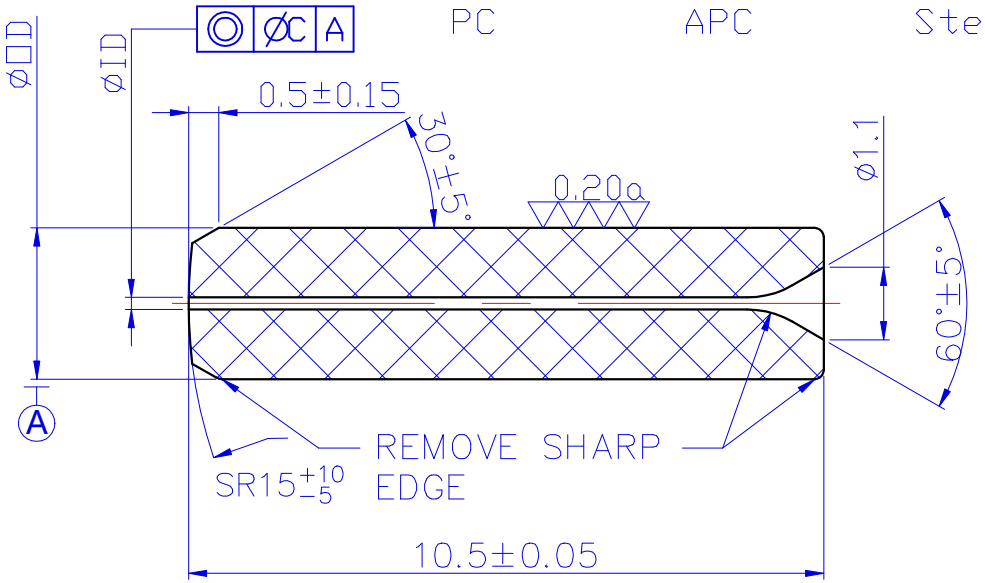

NOTE:
1、REMOVE ALL BURRS AND BREAK SHARP EDGE
2、NO DIRT ON SURFACE
3、TOLERANCES UNLESS OTHERWISE SPECIFIED:±0.1,±5°
4、PRODUCT MUST BE RoHS COMPLIANT

型 号	Part No.		Singlemode	Multimode
外 径	Outside Diameter	OD	Ø2.4990±0.0005	Ø2.4990±0.001
内 径	Inner Diameter	ID	Ø0.125/0.126	Ø0.126/0.127
内径公差	ID Tolerance	ID	+0.001/-0	+0.004/-0
同 芯 度	Concentricity	C	≤0.001	≤0.004

Title	Standard SC Ferrule			Material	ZrO2	Unit	mm
Dwg No.				Treatment		Scale	8:1
Drawn		Date				Ver.	1.0
Checked		Date		T&S Communications Co.,Ltd.			
Approved		Date					

NO.	DATE	NOTE	SIGN
△			
△			
△			