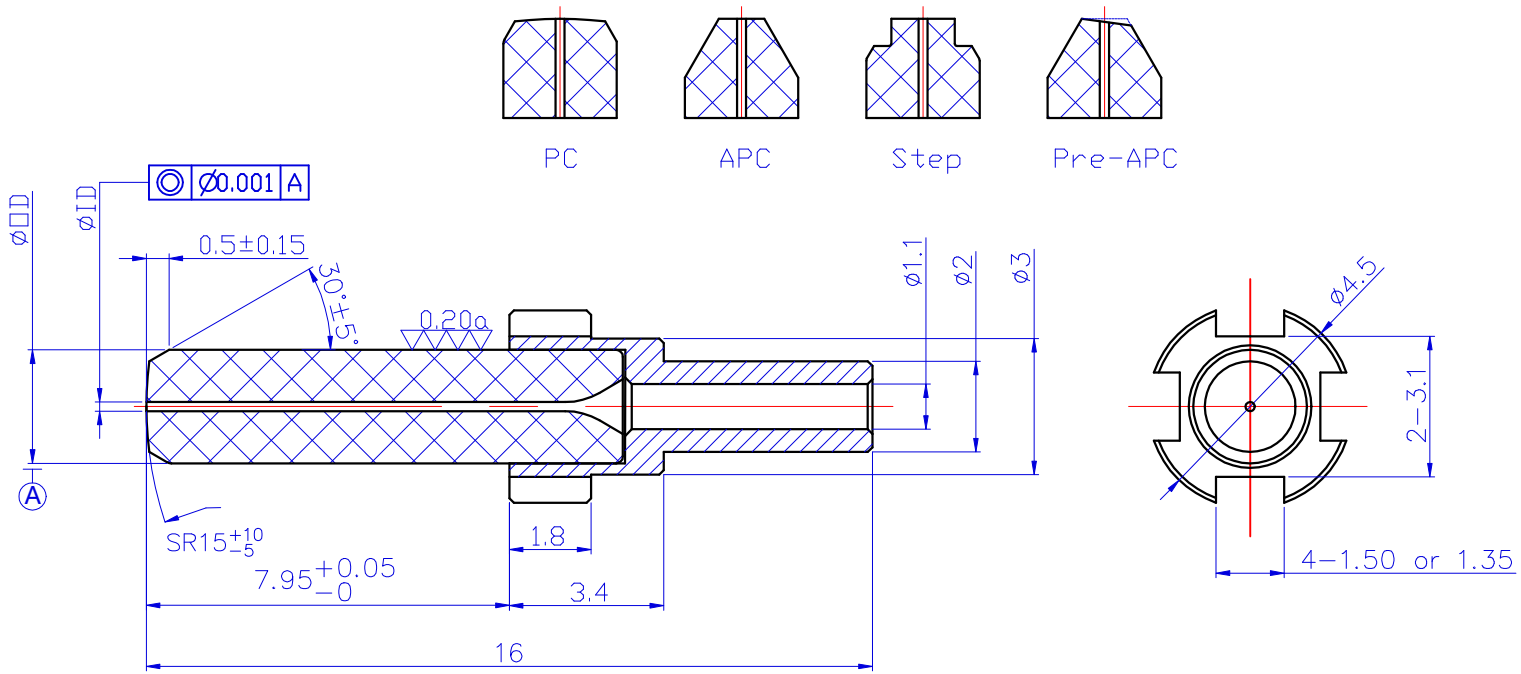

NOTE:
1、REMOVE ALL BURRS AND BREAK SHARP EDGE
2、NO DIRT ON SURFACE
3、TOLERANCES UNLESS OTHERWISE SPECIFIED:±0.1,±5°
4、PRODUCT MUST BE RoHS COMPLIANT
5、MATERIAL ZIRCONIA

型 号	Part No.		Singlemode	Multimode
外 径	Outside Diameter	OD	Ø1.249±0.0005	Ø1.2490 +0.0005 -0.0015
内 径	Inner Diameter	ID	Ø0.1250/0.1260	Ø0.126/0.127
内径公差	ID Tolerance	ID	+0.001/-0	+0.004/-0
同 芯 度	Concentricity	C	≤0.001	≤0.004
尾座槽宽	Notch Width	W	1.5 for PC, 1.35 for APC & Step	
尾 座	Flange		CU, Nickel Plated, or SUS 303	

Title	Standard SC Ferrule With Flange			Material	ZrO2	Unit	mm
Dwg No.				Treatment		Scale	6:1
Drawn		Date				Ver.	1.0
Checked		Date		T&S Communications Co.,Ltd.			
Approved		Date					

NO.	DATE	NOTE	SIGN
△			
△			
△			